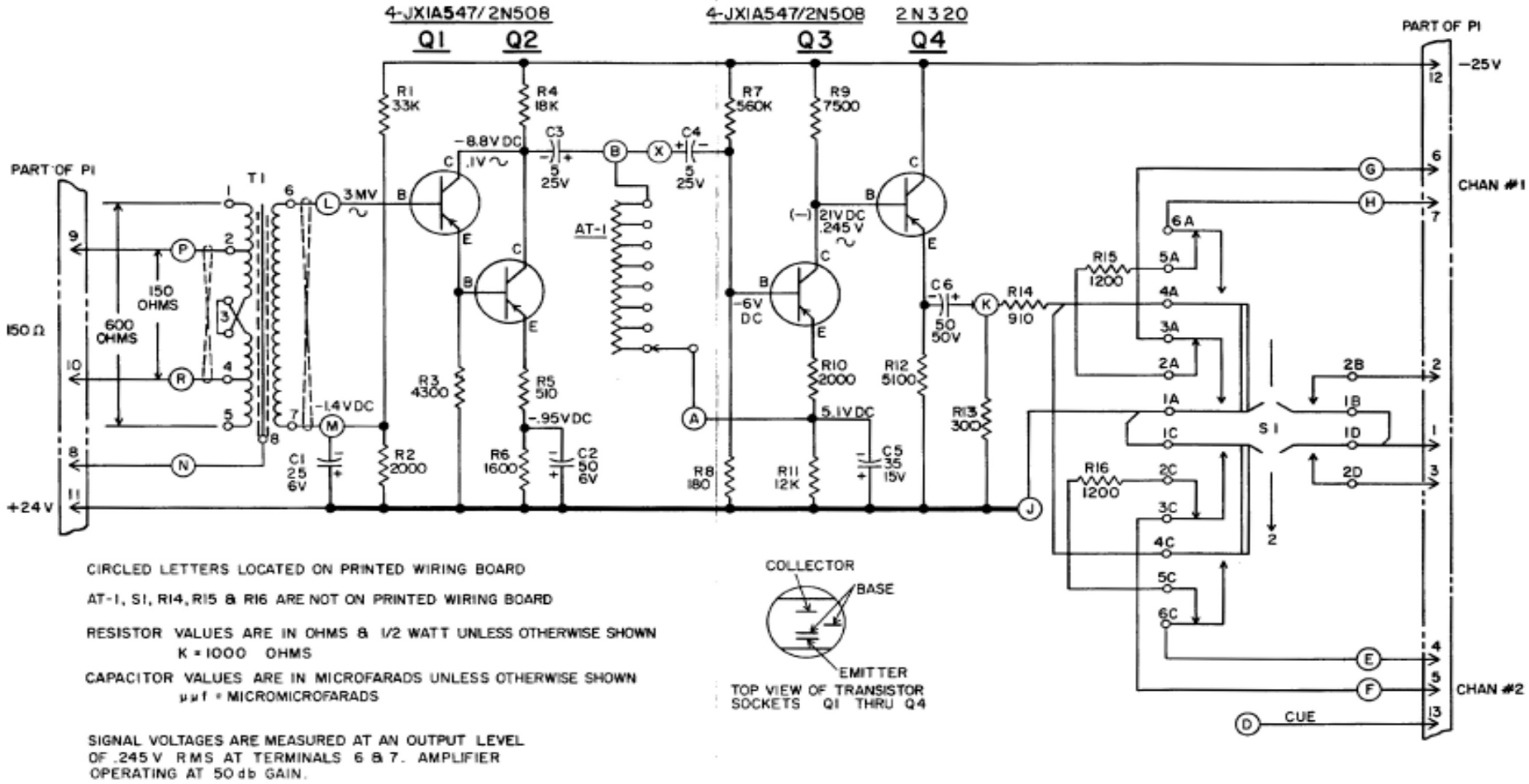

Fig. 5 Elementary Diagram, Pre-Amplifier, Model 4BA21A1 (C-7777444, Rev. A)